Template
printed towel 70x 140cm /27″x 54″ with bag 30x40cm /12″x 16″

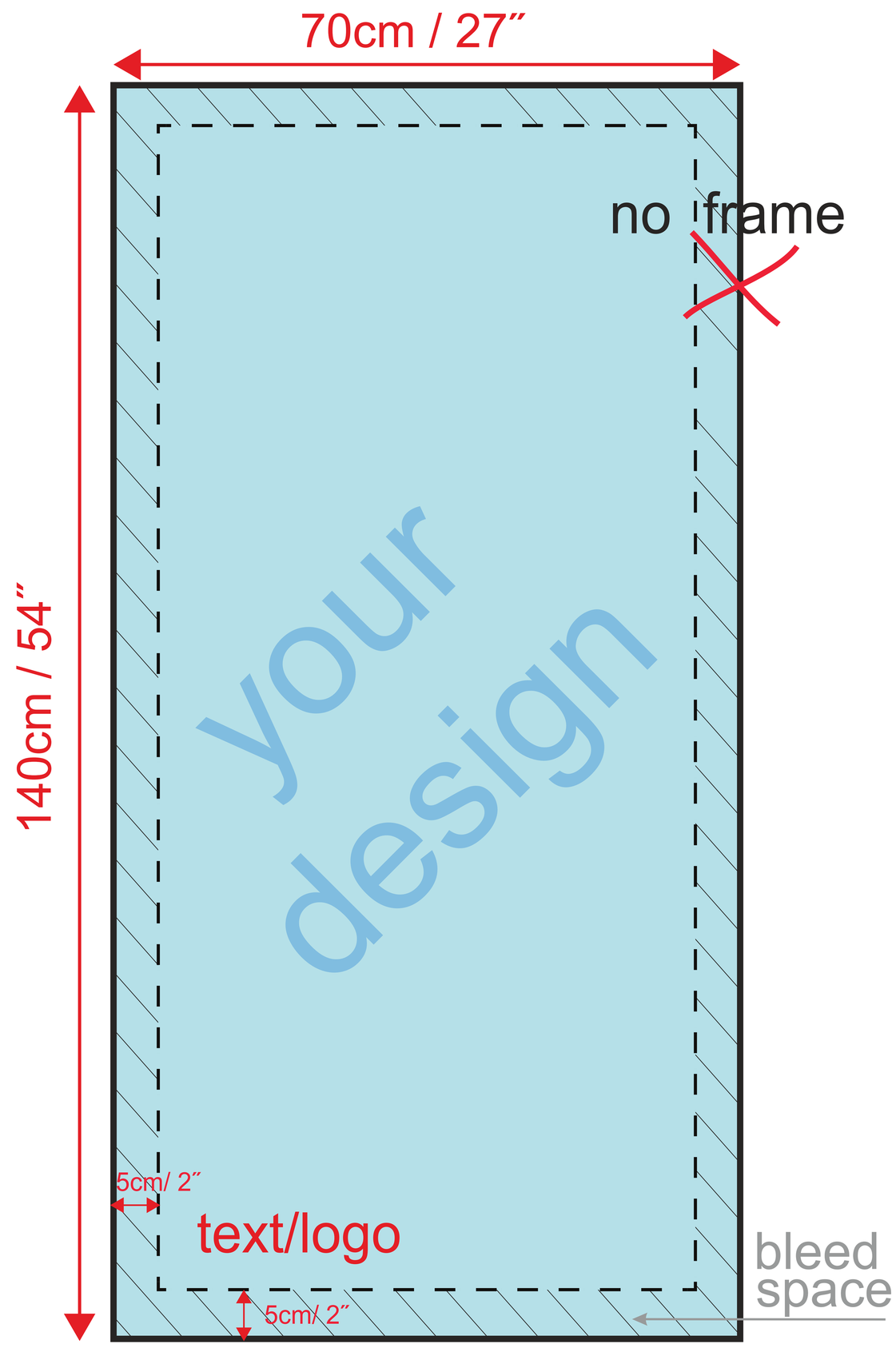

front side

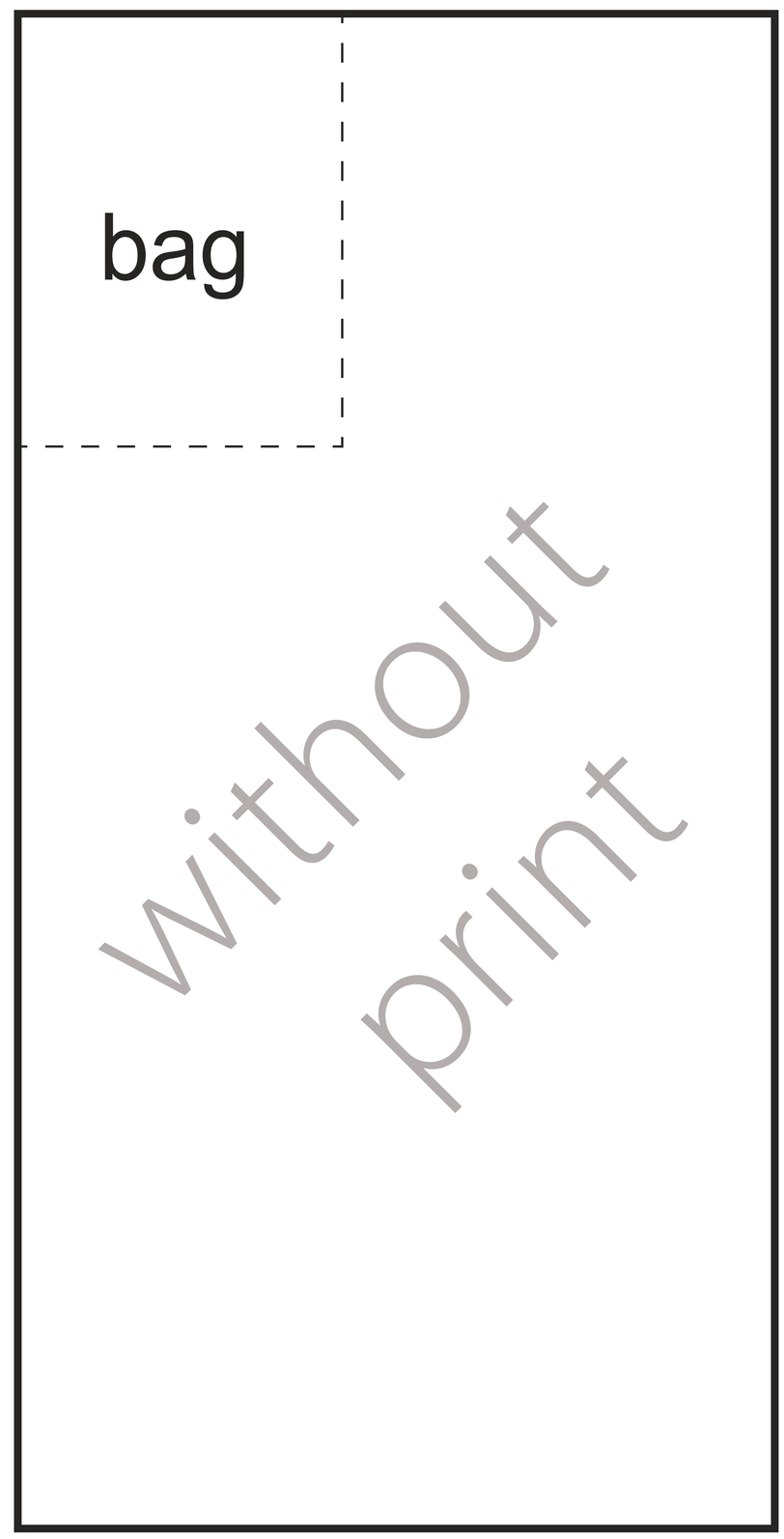

reverse side

printable area

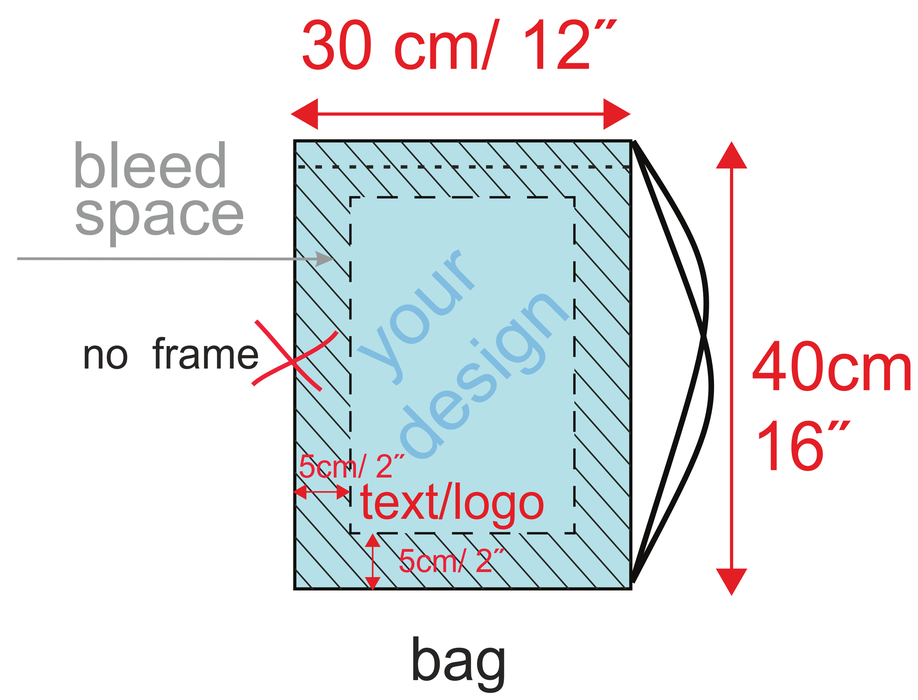

bag

1. File must be:
- in CMYK.
- formats: tif ; pdf; ai; eps.

2. Photos must be:
- between 150-300 dpi, *(Don't increase the pixels, this will not improve the image quality).*
- the used images must be embedded *(not linked).*

3. Bleed space:
- 5 cm for text, logo and important elements for design.

4. Text / logos:
- text must be converted to curves.
- size of the letters must be at least 0.6 cm.