# Template
# printed towel 70x 140cm /27″x 54″
# with lady bag 40x40cm /16″x 16″

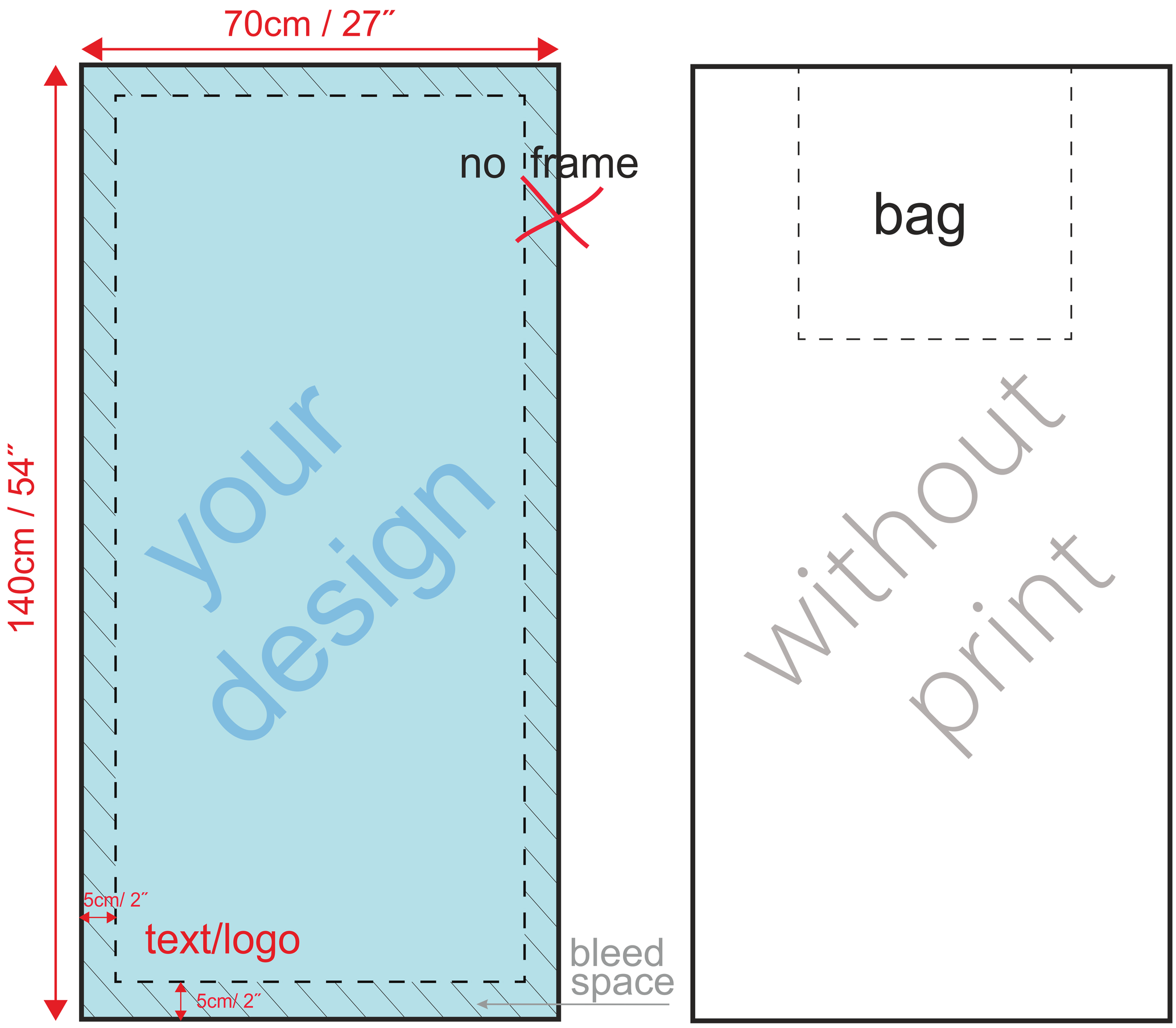


printable area

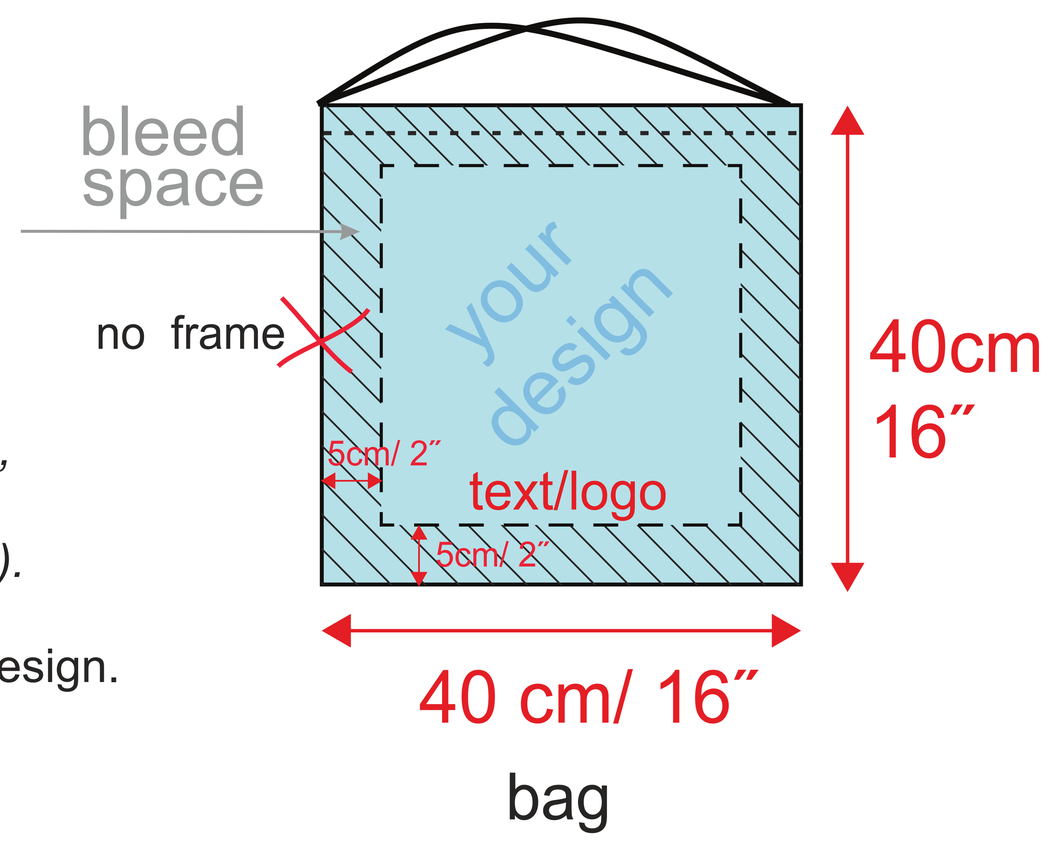


***1. File must be:***
- in CMYK.
- formats: tif ; pdf; ai; eps.

***2. Photos must be:***
- between 150-300 dpi, *(Don't increase the pixels, this will not improve the image quality).*
- the used images must be embedded *(not linked).*

***3. Bleed space:***
- 5 cm for text, logo and important elements for design.

***4. Text / logos:***
- text must be converted to curves.
- size of the letters must be at least 0.6 cm.